DE	GERMANY

Diagram / Parts List

SK40GD

GREEN MULTI LINE LASER

2021/11

(DE) SK40GD / GREEN MULTI LINE LASER

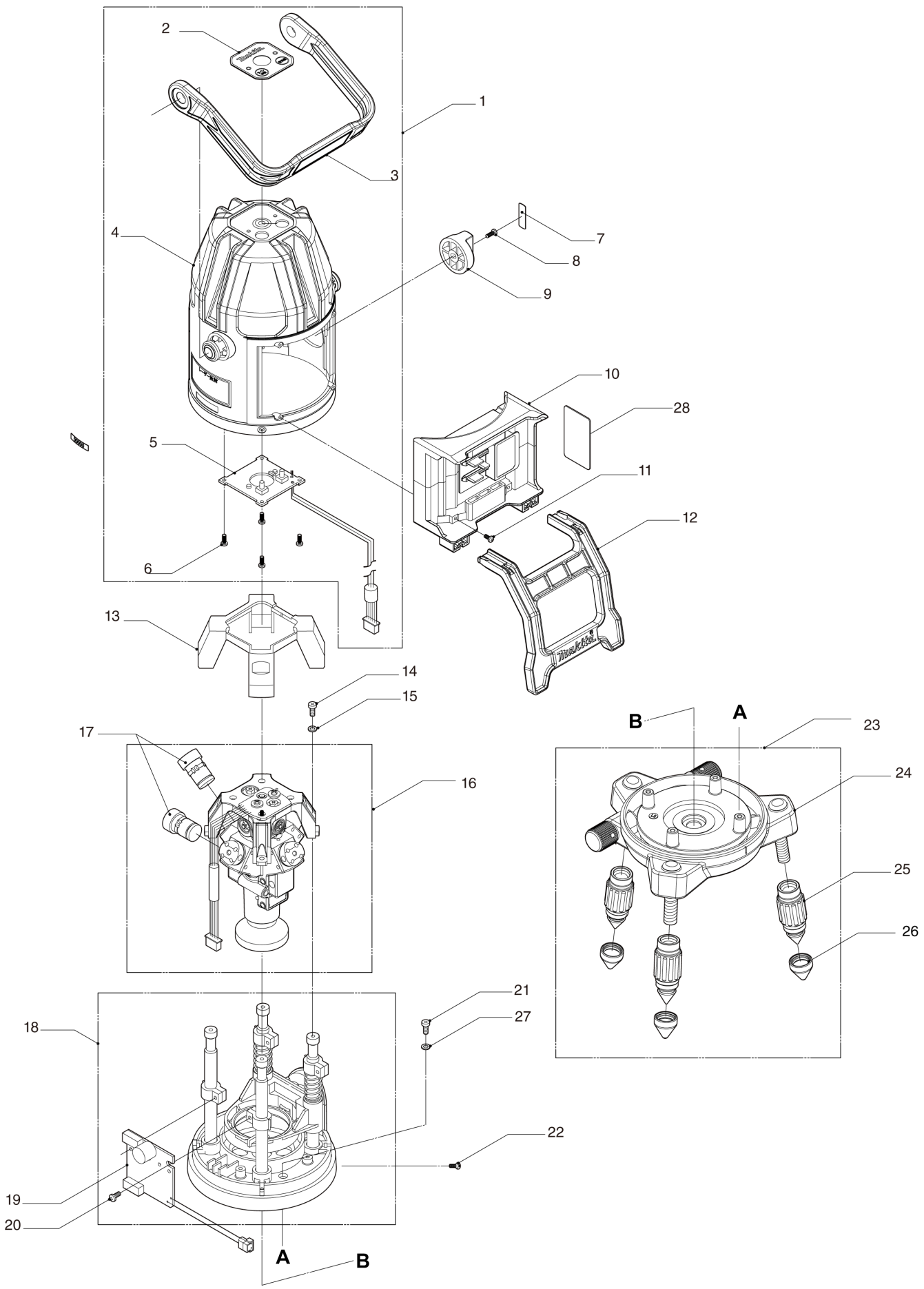

DE	GERMANY

SK40GD / GREEN MULTI LINE LASER

Item	Sub	Parts No.	Parts Description	Qty	I/C	E/C No.	Close No.	Remark
001		TK233UNSA1	HOUSING ASSEMBLY	1				
	D10		INC. 2-6					
002		TK233UN101	SWITCH LABEL	1				
003		TK01950104	HANDLE	1				
004		TK233UN008	HOUSING	1				
005		TK02330201	CONTROL UNIT(WITH CABLE)	1				
006		TK02330508	TAPPING SCREW ST2.2X6.5	4				
007		TK01700104	SWITCH KNOB LABEL	1				
008		TK02330501	PAN HEAD SCREW M2X6	1				
009		TK02330111	SWITCH KNOB	1				
010		TK0233009B	TERMINAL ASSY	1				
011		TKTP2080FB	TAPPING SCREW 2X8	4				
012		TK02330117	STAND 233	1				
013		TK02330302	ANTI SHOCK COVER	1				
014		TK02330505	PAN HEAD SCREW M3X10	4				
015		TK02330519	SPRING WASHER 3	4				
016		TK0233SA02	GIMBAL ASSEMBLY	1				
	D10		INC. 17					
017		TK02330205	GREEN LASER UNIT	5				
018		TK0233SA03	BASE ASSMBLY	1				
	D10		INC. 19,20					
019		TK02330202	POWER PCB(WITH CABLE)	1				
020		TK02330510	TAPPING SCREW ST2.2X12	2				
021		TK02330504	PAN HEAD SCREW M3X8	4				
022		TK0P2570FB	PAN HEAD SCREW M2.5X7	4				
023		TK0233SA04	TRIPOD ASSEMBLY	1				
	D10		INC. 24-26					
024		TK0233005S	TRIPOD BASE	1				
025		TK0233323S	SPIKE	3				
026		TK02330325	SPIKE CAP	3				
027		TK02330519	SPRING WASHER 3	4				
028		TK233EU113	NAME PLATE 233 EU	1				
A01		TK233UNIM1	CD-ROM	1				
A02		TK233UNQSG	OPERATION GUIDE	1				
A03		TK233UNSB1	SAFETY MANUAL	1				
A04		TK02100200	GLASSES LASER VISIBILITY	1				
A05		TKK233F000	STORAGE CASE	1				

Interchange
O : Yes
X : No
< : the new part can be substituted for the current.
> : the current part can be substituted for the new.
S : Interchangeable as a set.